Model 型号	LF356L-V1	Specification No. 规格书编号	JMRI-LF356L-V1-D06-01	Version 版本	A

产品交付规格书

Product Specification

方形磷酸铁锂电池

Prismatic LFP Cell

产品名称 Product：LF356L

Drafted by 编制	Product Design Checked by 产品设计审核	Quality Checked by 品质审核	Sales Checked by 销售审核	Approved by 批准
王永平	万勤	朱智博	王子彧	程呈

Customer Recipient 客户接收栏	
Company Name	**公司名称:**
Approved by	**批 准:**
Date	**日 期:**

2026 年 3 月 Mar., 2026

惠州亿纬锂能股份有限公司 EVE Energy Co., Ltd.

Customer Requirements 客户要求

Customers shall communicate and reach an agreement with EVE Power Co., Ltd. regarding special requirements beyond the product specifications. If certain applications and operation conditions are out of the description of this specification, EVE may design and manufacture products according to customer's inputs.

客户输出产品规格书以外的特殊需求信息需与亿纬动力沟通并达成一致。例如客户有一些特别的应用或者操作条件不同于此文件中所描述的，亿纬动力根据客户的特别要求进行产品的设计和生产。

No. 序号	Special Requirements 特殊要求	Standards 标准
1		
2		
3		
4		
5		

Customer Code 客户代码： _____ **Signature 签字：** _____ **Date 日期：** _____

Model 型号	LF356L-V1	Specification No. 规格书编号	JMRI-LF356L-V1-D06-01	Version 版本	A

Revision History 变更履历

Version 版本	Date 日期	Contents 更改内容	Checked By 确认人
A	2026.03.20	First Release 新版发行	Yongping Wang 王永平

Contents

目录

CUSTOMER REQUIREMENTS 客户要求 I

REVISION HISTORY 变更履历 II

TERM DEFINITION 术语定义 IV

1 SCOPE OF APPLICATION 适用范围 ..... - 1 -

2 CELL SPECIFICATIONS 电池规格 ..... - 1 -

2.1 Product Specifications 产品规格 ..... - 1 -

2.2 Electrical Performance 电性能 ..... - 2 -

2.3 Charging Parameters 充电参数 ..... - 3 -

2.4 Discharging Parameters 放电参数 ..... - 4 -

2.5 Safety Performance 安全性能 ..... - 5 -

3 PRODUCT END-LIFE MANAGEMENT 产品寿命终止管理 ..... - 6 -

4 APPLICATION CONDITIONS 应用条件 ..... - 6 -

5 SAFETY PRECAUTIONS 安全防范 ..... - 13 -

6 DISCLAIMER 免责声明 ..... - 15 -

7 RISK WARNING 风险警告 ..... - 16 -

8 OTHERS 其他 ..... - 16 -

9 CONTACT INFORMATION 联系方式 ..... - 18 -

APPENDIX 1: CELL DRAWING OF LF356L 附录 1：LF356L 电池图纸 ..... - 19 -

APPENDIX 2: TEST CONDITIONS AND METHODS 附录 2：试验条件及方法 ..... - 20 -

Term Definition 术语定义

Product 产品:

Refers to the LF356L rechargeable lithium-ion cell with prismatic aluminum shell manufactured by EVE Power Co., Ltd. (hereinafter referred to as EVE) in this specification.

本规格书中的产品是指湖北亿纬动力有限公司（以下简称 EVE）生产的 LF356L 方形铝壳锂离子电池。

Customer 客户:

Refers to the buyer in the product sales contract signed with EVE.

指与 EVE 签署产品销售合同中的买方。

Environment temperature 环境温度:

The ambient temperature where the cell is located.

电池所处的周围环境温度。

Cell temperature 电池温度:

The temperature measured by temperature sensor installed at the center of cell surface. The selection of temperature sensor and measuring line shall be jointly agreed by EVE and the customer.

由接入电池表面中心的温度传感器测量的电池表面的温度，温度传感器和测量线路的选择由 EVE 和客户共同商定。

Fresh cell 新鲜电池:

Refers to the cell within 7 days from the customer's receipt date (for domestic transportation only)

指客户收货日期算起 7 天以内的电池（仅限国内运输）。

Power 功率:

The ratio of the charge/discharge power to the cell energy value measured multiple times by the battery system, denoted by P. For example, when the cell energy is 1140 Wh and the charge/discharge power is 570 W, the charge/discharge power is 0.5P; When the cell energy decays to 912 Wh and the charge/discharge power is 456 W, the charge/discharge ratio is 0.5P.

充/放电功率与电池系统多次测量的电池的能量值的比率，用字母 P 表示。例如，当电池能量为 1140 Wh，充电或放电功率为 570 W 时，则充电或放电功率为 0.5P；当电池能量衰减为 912 Wh，充电或放电功率为 456W 时，则充电或放电功率为 0.5P。

State of charge 荷电状态:

Under unloaded conditions, the ratio of the cell capacity state to the nominal capacity measured in ampere-hour or watt-hour. The abbreviation is expressed by SOC. For example, if the capacity at 356.3Ah is 100% SOC, the capacity at 0 Ah is 0% SOC.

在无负载的情况下，以安培小时或者以瓦特小时为单位计量的电池容量状态与标称容量的比值，缩写用 SOC

表示。例如：若将容量为 356.3Ah 的状态视为 100% SOC，若容量为 0 Ah 时，SOC 为 0%。

State of health 健康状态:

The ratio of actual cell capacity to nominal capacity, abbreviated as SOH. For example, if the cell capacity of 356.3 Ah is 100% SOH, when the cell capacity decays to 285.0 Ah, it's at 80% SOH.

电池实际容量与标称容量的比值，缩写用 SOH 表示。例如：电池容量 356.3 Ah 为 100% SOH，容量衰减为 285.0Ah 时，SOH 为 80%。

Cycle 循环:

A cycle means the cell being charged and discharged once according to the charging and discharging standards. The cell shall be charged and discharged once according to the specified charging and discharging standards as a cycle. The cycle includes short-term normal charging or a combination of regenerative charging and discharging processes. In the charging process, sometimes there is only normal charging and no regenerative charging. The discharge can be formed by combining some partial discharges.

电池按规定的充放标准充放一次为一个循环。循环包括短时的正常充电或者再生充电和放电过程的组合，在充电过程中有时只有正常充电而无再生充电的情况。放电可以由一些部分放电组合在一起形成。

Open circuit voltage 开路电压:

The voltage of the cell measured when unloaded or circuit is disconnected. The abbreviation is expressed by OCV.

没有接入任何负载和电路时测得的电池的电压，缩写用 OCV 表示。

AC resistance 交流内阻:

Apply 1kHz sine wave current between the positive and negative poles of the cell, and the internal resistance obtained is AC resistance, which is abbreviated as ACR. The test method is described in appendix 1.6 of this specification.

给电池正负极注入 1kHz 的正弦波电流，测试所得到的内阻值，缩写用 ACR 表示，测试方法如本规格书附录第 1.6 条所述。

DC resistance 直流内阻:

The ratio of the voltage changes to the corresponding current change under working conditions, and the abbreviation is DCR. The test method is as described in appendix 1.6 of this specification.

工作条件下电池的电压变化与相应的电流变化之比，缩写用 DCR 表示，测试方法如本规格书附录第 1.6 条所述。

Module 模组:

The intermediate product between single cell and pack, which is formed by lithium-ion cells in series and parallel after installing cell monitors and management devices.

锂离子电池经串并联方式组合，加装单体电池监控与管理装置后形成的电池与 pack 的中间产品。

Pulse current 脉冲电流:

The currents that appear periodically are called pulse currents. The pulse currents appear either in the same direction or in alternating positive and negative directions.

以周期重复出现的电流为脉冲电流，脉冲电流或是以同一方向出现，或是以正、负交替变换方向出现。

Compression force 压缩力:

When the module is assembled, the cell can withstand the force perpendicular to the cell stacking direction.

模组组装时，电池可承受压缩力的安全边界。

Swelling force 膨胀力:

The force on the clamp due to cell expansion during use, which may caused by inherent characteristic changes, such as the rebound of electrode thickness.

在使用过程中，因极片厚度反弹等固有特性导致电池膨胀，而对约束夹具产生的作用力。

Units of measurement：Refer to following table

测量单位：见下表

Table 1 Units of Measurement

表 1 测量单位

No. 序号	Units 单位	Abbreviation 简写	Type of units 单位类型
1	Volt 伏特	V	Voltage 电压单位
2	Ampere 安培	A	Current 电流单位
3	Ampere-Hour 安培-小时	Ah	Capacity 容量单位
4	Watt-Hour 瓦特-小时	Wh	Energy 能量单位
5	Ohm 欧姆	Ω	Resistance 电阻单位
6	Milliohm 毫欧姆	mΩ	Resistance 电阻单位
7	Degree Celsius 摄氏度	℃	Temperature 温度单位
8	Millimeter 毫米	mm	Length 长度单位
9	Second 秒	s	Time 时间单位
10	Hertz 赫兹	Hz	Frequency 频率单位
11	Newton 牛顿	N	Force 力单位
12	Kilogram-Force 千克力	kgf	Force 力单位

1 Scope of Application 适用范围

This document describes the specification of the LF356L lithium-ion cell manufactured by EVE Power Co., Ltd.

本产品规格书适用于 EVE 生产的 LF356L 型号锂离子电池。

2 Cell Specifications 电池规格

2.1 Product Specifications 产品规格

Table 2 Product Specifications
表 2 产品规格

Items 项目		Specifications 规格	Remarks 备注
Nominal Capacity 标称容量		356.3Ah	0.5P / 0.5P, 25°C ± 2°C, 2.5 V ~ 3.65 V Fresh cell 新鲜电池
Nominal Energy 标称能量		1140 Wh	
Nominal Voltage 标称电压		3.2 V	/
End-of-charge Voltage (U_{max}) 充电限制电压（U_{max}）		3.65 V	/
End-of-discharge Voltage (U_{min}) 放电截止电压（U_{min}）		2.5 V（T >0°C） 2.0 V（T ≤0°C）	/
Standard Charging Power 标准充电功率		0.5P	25°C ± 2°C
Max. Continuous Charging Power 最大持续充电功率		0.5P	25°C ± 2°C
Standard Discharging Power 标准放电功率		0.5P	25°C ± 2°C
Max. Continuous Discharging Power 最大持续放电功率		0.5P	25°C ± 2°C
Initial Internal Resistance 初始内阻		0.15 mΩ ± 0.05 mΩ	AC, 1 kHz, Delivery SOC, Fresh cell 新鲜电池，出货 SOC
Weight 重量		6220 g ± 150 g	/
Dimensions (With	Height1 高度 1（H1）	211.6 mm ± 0.5 mm	With Terminal 含极柱

insulation film) 尺寸（含蓝膜）	Height2 高度 2（H2）	209.0 mm ± 0.5 mm	Without Terminal 不包含极柱
	Length 宽度（L）	186.6 mm ± 0.5 mm	/
	Thickness 厚度（T）	72.0 mm ± 0.5 mm	(300 kgf ± 20 kgf compression force, Delivery SOC) (300 kgf ± 20 kgf压缩力，出货 SOC)
	Center distance between the poles 极柱中心距（D）	123.0 mm ± 0.3 mm	/
Operation Temperature 工作温度	Charging Temperature 充电温度	0°C ~ 60°C	/
	Discharging Temperature 放电温度	-30°C ~ 60°C	/
Storage Temperature 存储温度	1 year 1 年	0°C ~ 35°C	Delivery SOC status 出货 SOC 状态
	1 month 1 个月	-20°C ~ 45°C	
Self-discharge 自放电	First Month 首月	≤3.5% / M	Delivery SOC status, 25°C ± 2°C storage 出货 SOC 状态，25°C ± 2°C 储存
	After First Month 首月后	≤3.0% / M	

2.2 Electrical Performance 电性能

Table 3 Electrical Performance Parameters
表 3 电性能参数

Items 项目	Specifications 规格			Testing Methods 测试方法
Rate Charge and Discharge Performance 倍率充放电性能	Items / Rate	Discharging energy 放电能量	Energy efficiency 能量效率	Appendix 1.11 附录 1.11
	0.5P	E_1^*	$E_1^*/E_1 \geq 94.0\%$	
	1P	$E_2^* \geq 95\% * E_1^*$	$E_3^*/E_3 \geq 90.0\%$	
High/Low Temperature Charge/Discharge Performance 高/低温充放电性能	Items / Temp.	Discharging energy 放电能量	Energy efficiency 能量效率	Appendix 1.12 附录 1.12
	45°C	$E_4^* \geq 98\% * E_0^*$	$E_4^*/E_4 \geq 95\%$	
	5°C	$E_5^* \geq 80\% * E_0^*$	$E_5^*/E_5 \geq 80\%$	
Capacity Retention and Recovery	Items / Temp.	Discharging energy retention	Discharging energy recovery	Appendix 1.13

荷电保持与恢复（100% SOC）		能量保持率	放电能量恢复率	附录 1.13
	25℃ & 28 days	$E_6^* \geq 95\%*E_0^*$	$E_7^* \geq 96\%*E_0^*$	
	45℃ & 30 days	$E_8^* \geq 95\%*E_0^*$	$E_9^* \geq 95\%*E_0^*$	
Storage 存储性能（50% SOC）	Items / Temp.	Discharging energy recovery 放电能量恢复率		Appendix 1.14 附录 1 .14
	25℃ & 28days	$\geq 97\%*E_0^*$		
	50℃ & 30days	$\geq 96\%*E_0^*$		
Cycle Life 循环寿命	25℃ Cycle 25℃循环	8000 cycles, 70% SOH		Appendix 1.15 附录 1.15
Cell temperature rise 电芯温升	25℃, 0.5P, discharge 25℃，0.5P 放电	≤6℃		Temperature rise refers to the difference of the cell surface temperature before and after discharging 温升是指放电前后的电池表面温度差值
Swelling Force 膨胀力	70% SOH	≤ 50000 N		Appendix 1.16 附录 1.16
	60% SOH	≤ 60000 N		

2.3 Charging Parameters 充电参数

2.3.1 Charging Mode 充电模式

Table 4 Charging Mode Parameters

表 4 充电模式参数

Parameters 参数	Specifications 规格	Conditions 条件
Standard charging power 标准充电功率	0.5P	25℃ ± 2℃
Maximum continuous charging power 最大充电可持续功率	0.5P	25℃ ± 2℃
Standard charging voltage 标准充电电压	Single cell ≤ 3.65 V 单体电池 ≤ 3.65 V	
Standard charging mode 标准充电模式	Charge to 3.65 V with a constant power of 570 W 以 570 W 恒功率充电至 3.65 V	

Standard charging temperature 标准充电温度	25°C ± 2°C	
Absolute charging temperature (cell temperature) 绝对充电温度（电池温度）	0°C ~ 60°C	No matter what charging mode the cell is in, once the cell temperature exceeds the absolute charging temperature range, stop charging. 无论电池处于何种充电模式，电池温度一旦超过绝对充电温度范围，即停止充电。
Absolute charging voltage 绝对充电电压	Max 3.8 V 最大 3.8 V	No matter what charging mode the cell is in, once the cell voltage exceeds the absolute charging voltage, stop charging. 无论电池处于何种充电模式，电池电压一旦超过绝对充电电压，即停止充电。

2.3.2 Other Charging Modes 其他充电模式

Table 5 Continuous Charging Modes (unit: P-Rate)

表 5 持续充电模式（单位：P-Rate）

Cell temperature /°C 电池温度/°C		0	5	10	15	20	25	45	50	55	60
Max charging power 最大充电功率（P）	0% ~ 80% SOC	0.05	0.1	0.2	0.3	0.5	0.5	0.5	0.5	0.5	0
	80% ~ 100% SOC	0.05	0.1	0.2	0.3	0.3	0.5	0.5	0.5	0.5	0

2.4 Discharging Parameters 放电参数

2.4.1 Discharging Mode 放电模式

Table 6 Discharging Mode Parameter

表 6 放电模式参数

Parameters 参数	Product specifications 产品规格	Conditions 条件
Standard discharging power 标准放电功率	0.5P	25°C ± 2°C
Maximum continuous discharging power 最大放电可持续功率	0.5P	25°C ± 2°C
Standard discharge mode 标准放电模式	Discharge to 2.5 V with a constant power of 570 W 以 570W 恒功率放电至 2.5 V	

Discharge cut-off voltage 放电截止电压	2.5 V	Temperature T > 0℃ 温度 T > 0℃
	2.0 V	Temperature T ≤ 0℃ 温度 T ≤ 0℃
Standard discharging temperature 标准放电温度	25℃ ± 2℃	
Absolute discharging temperature (cell temperature) 绝对放电温度（电池温度）	-35℃ ~ 65℃	No matter what discharging mode the cell is on, once the cell temperature exceeds the absolute discharge temperature range, stop discharging. 无论电池处于何种放电模式，电池温度一旦超出绝对放电温度范围，即停止放电。
Absolute discharging voltage 绝对放电电压	Min 1.8 V 最小 1.8 V	No matter what kind of discharging mode the cell is on, once the cell voltage is less than the absolute discharge voltage, stop discharging. 无论电池处于何种放电模式，电池电压一旦小于绝对放电电压，即停止放电。

2.4.2 Other Discharging Modes 其他放电模式

Table 7 Continuous Discharging Rate (unit: P-Rate)

表 7 持续放电倍率（单位：P-Rate）

Cell temperature /℃ 电池温度/℃		-30	-20	-10	-5	0	5	45	50	55	60
Max discharging power 最大放电功率（P）	0% ~ 100% SOC	0.5	0.5	0.5	0.5	0.5	0.5	0.5	0.5	0.5	0

2.5 Safety Performance 安全性能

Table 8 Safety Performance Parameters

表 8 安全性能参数

Items 项目	Specifications 规格	Test Methods 测试方法
Over-charge 过充电	No fire, No explosion 不起火、不爆炸、不应在防爆阀或泄压点之外的位置发生破裂	Appendix 1.17.1 附录1.17.1
Over-discharge 过放电	No fire, No explosion 不起火、不爆炸、不应在防爆阀或泄压点之外的位置发生破裂	Appendix 1.17.2 附录 1.17.2
External Short-circuit 短路	No fire, No explosion 不起火、不爆炸、不应在防爆阀或泄压	Appendix 1.17.3 附录 1.17.3

	点之外的位置发生破裂	
Crush Test 挤压	No fire, No explosion 不起火、不爆炸	Appendix 1.17.4 附录 1.17.4
Drop Test 跌落	No fire, No explosion 不起火、不爆炸	Appendix 1.17.5 附录 1.17.5
Low Pressure 低气压	No leakage, No fire, No explosion 不漏液、不起火、不爆炸	Appendix 1.17.6 附录 1.17.6
Heating 加热	No fire, No explosion 不起火、不爆炸	Appendix 1.17.7 附录 1.17.7
Thermal Runaway 热失控	No fire, No explosion 不起火、不爆炸	Appendix 1.17.8 附录 1.17.8

Notes 备注：

The descriptions above only represent compliance at the cell level. The safety compliance at the module and the system level requires the customer to perform design verification.

以上仅代表电芯层级的符合性。模组或系统层级的安全符合性，需要客户设计验证。

3 Product End-life Management 产品寿命终止管理

The cell life is limited. Customers should establish an effective tracing system to monitor and record the internal resistance and capacity of each cell during its life. The measurement method and calculation method of internal resistance and capacity need to be discussed and agreed between the customer and EVE. When the internal resistance of the cell in use exceeds 150% of the initial internal resistance, or the capacity is less than 60% of nominal capacity, the cell should not to be used any more. Violation of this requirement will exempt EVE from its responsibility for product quality assurance in accordance with the product sales agreement and this specification, as well as all related liabilities such as loss compensation caused thereby.

电池使用期限是有限的，客户应建立有效的跟踪系统监测并记录每个使用期限内电池的内阻和容量。内阻及容量的测量方法和计算方法需要客户和 EVE 共同讨论和双方同意。当使用中电池的内阻超过这个电池最初内阻的150%或容量小于标称容量的 60%，应停止使用电池。违反该项要求，将免除 EVE 依据产品销售协议以及本规格书所应承担的产品质量保证责任及由此引起的损失赔偿等一切相关责任。

4 Application Conditions 应用条件

Customer shall ensure strict compliance with the following cell application conditions:

客户应当确保严格遵守以下与电池相关的应用条件

4.1 Customer shall configure a battery management and monitoring system to strictly monitor, manage and protect each cell, and provide detailed information of the BMS, including but not limited to its design, features, setting, and data file format to EVE for design review and record keeping. And a battery management archive shall be established to keep all monitoring data of the cells, so as to be a reference for problems tracing and product quality responsibility division. EVE is not responsible for product quality assurance if no complete monitoring data of the battery system during its service life is provided.

客户应配置电池管理和监控系统，严密监控、管理与保护每个电池，并向 EVE 提供电池管理系统详细的设计方案、系统特点、框架、系统数据等相关信息，以供 EVE 对该系统进行设计评估，并建立电池管理档案，保存完整的电池运转的监测数据，用做问题追溯及产品质量责任划分的参考。不具备完整的电池系统使用期限内的监测数据的，EVE 不承担产品质量保证责任。

4.2 Waterproof and dustproof problems shall be fully considered in the pack design, and the pack must meet the waterproof and dustproof grade stipulated by relevant national standards. EVE is not responsible for the damage (such as corrosion, rust, etc.) of the cell caused by waterproof and dustproof problems.

电池包设计中应充分考虑电池的防水、防尘问题，电池包须满足国家有关标准规定的防水、防尘等级。由于防水、防尘问题而导致的电池的损坏（如腐蚀、生锈、等），EVE 不承担质量保证责任。

4.3 It is forbidden to mix different types of cells in the same battery system, otherwise, EVE will not be responsible for the quality assurance.

禁止不同型号电池在同一电池系统中混用，否则，EVE 不承担质量保证责任。

4.4 The design of the BMS shall meet the safety voltage and operating temperature limitations in Tables 9 and Table 10

电池管理系统设计需满足表 9 和表 10 的安全电压和操作温度限制条件

Table 9 Safety Limit Voltage Parameters

表 9 安全限制电压参数

Items 项目	**Categories** 类别	**Parameters** 参数	**Protective Actions** 保护动作
Charging Voltage 充电电压	Charging Ends 充电终止	3.65 V	When the cell voltage reaches 3.65 V, stop charging. 当电池电压达到 3.65 V 时终止充电。
	Third 三级	3.7 V	BMS alarms BMS 系统报警
	Second 二级	3.75 V	Reduce cell charging current or power 降低电池充电电流或者功率

	First 一级	3.80 V	Cut off the current, force the cell to stop working and lock the BMS until the technician solves the problem. 切断电流，强制使电池停止工作，并锁定电池管理系统，直至技术人员解决问题。
Discharging Voltage 放电电压	Discharging Ends 放电终止	2.5 V (> 0°C) 2.0 V (≤ 0°C)	When the cell voltage reaches 2.5 V (0°C) or 2.0 V (≤0°C), stop charging. 当电池电压达到 2.5 V (> 0°C) 或者 2.0 V (≤ 0°C) 时终止充电。
	Third 三级	2.0 V (> 0°C) 1.9 V (≤0°C)	BMS alarms BMS 系统报警
	Second 二级	1.9 V (> 0°C) 1.8 V (≤ 0°C)	Reduce cell discharging current or power 降低电池放电电流或者功率
	First 一级	1.85 V (> 0°C) 1.75 V (≤ 0°C)	Cut off the current, force the cell to stop working and lock the BMS until the technician solves the problem. 切断电流，强制使电池停止工作，并锁定电池管理系统，直至技术人员
BMS protection BMS 保护	Short circuit protection 短路保护	Short circuit is not allowed 不允许短路	When a short circuit occurs, the overcurrent protection device will disconnect the cell. 发生短路时，由过流器断开电池
Over current protection 过流保护	Reference 2.3 & 2.4 参考第 2.3 和 2.4 条		BMS controls the charging/discharging current within specifications. 电池管理系统控制充放电电流符合规格
Upper limit charging capacity 充电容量上限保护	Charging capacity < 402.6 Ah 充电容量小于 402.6 Ah		The charging capacity shall be less than 113% of the nominal capacity. 充电容量上限保护，充电容量小于标称容量的 113%

Table 10 Safety Limit Temperature Parameters

表 10 安全限制温度参数

Items 项目	Parameters 参数	Remarks 备注

Recommended operating temperature range 推荐操作温度范围	10℃ ~ 45℃	Recommended cell using temperature range 推荐使用电池的温度范围
Maximum operating temperature 最高操作温度	60℃	If the cell temperature exceeds the maximum operating temperature, the cell power needs to be reduced to 0. 如果电池使用温度超过最高操作温度，功率需要降为 0。
Minimum operating temperature 最低操作温度	-30ºC	If the cell temperature exceeds the minimum operating temperature, the cell power needs to be reduced to 0. 如果电池使用温度低于最低操作温度，功率需要降为 0。
Maximum safe temperature 最高安全温度	65℃	If the battery temperature exceeds the maximum safe temperature, it will cause irreversible and permanent damage to the battery, and the user should not use it higher than the maximum safe temperature. 如果电池使用温度超过最高安全温度，将会造成电池不可逆的永久性损坏，用户使用时不得高于最高安全温度。
Minimum safe temperature 最低安全温度	-35℃	If the battery temperature exceeds the minimum safe temperature, it will cause irreversible and permanent damage to the battery, and the user should not lower the minimum safe temperature when using it. 如果电池使用温度超过最低安全温度，将会造成电池不可逆的永久性损坏，用户使用时不得低于最低安全温度。
Over heat protection 过热保护	Reference 2.3 & 2.4 参考第 2.3 和 2.4 条	Stop charging/discharging when the temperature exceeds the limitation in this specification 当温度超过本规格书规定时，终止充电/放电

Notes 备注：

a) If the cell charging voltage exceeds the cut-off voltage, corresponding protective actions need to be taken. If the cell discharging voltage reaches the cut-off voltage, it is necessary to charge as soon as possible to prevent it from being over-discharged. EVE shall not be responsible for any cell quality issues caused by over-discharge and exceeding the protection voltage.

电池充电超过终止电压时，需依据相应的保护动作采取措施。当电池放电电压到达终止电压时，需尽快充电，防止电池进入过放状态。对于超出保护电压和电池过放导致的电池质量问题，EVE 不承担任何保证责任。

b) It’s prohibited to charge the cell at low temperatures (lower than 0℃) and the minimum safety temperature of this specification, otherwise EVE will not be responsible for any quality assurance liability. The heat dissipation design of pack may affect cell electrical performance, EVE will not be responsible for any liability regarding cell quality issues caused by the pack heat dissipation design.

电池禁止在低温下（0℃以下）充电及在规定的最低安全温度下放电，否则 EVE 不承担任何电池质量保证责

任。电池包的散热设计会影响电池性能，因电池包散热设计问题导致的电池质量问题，EVE 不承担任何责任。

4.5 Recommendations for Module Welding Parameters 模组焊接参数建议

Table11 Welding Parameters
表 11 焊接参数表

Items 项目		Specifications 规格	Remarks 备注
Welding Parameter of Al Busbar 铝巴焊接参数	Laser Welding Depth 激光焊接熔深	≤ 2.0 mm	/
	Max Pressure on Poles 极柱承受最大压力	700 N	The maximum force on the poles in vertical direction with no deformation. 极柱承受最大垂直力，不发生变形
	Max Torque on Poles 极柱承受最大扭矩	6 N·m	The maximum torsion on the poles with no loosen. 极柱承受最大扭曲，不松动
	Max Temperature of Poles 极柱承受最大温度	130℃	The maximum temperature that the poles bear before the plastic pad deforms. 极柱承受最大温度，塑胶垫不发生变形

4.6 Cell Compression Force 电池压缩力

When forming modules, a compression force in the direction of vertical thickness is applied to the cells in order to make them better arranged and fixed. If the compression force is too large, the cells may be damaged or even leak. Cell compression force test conditions are as follows:

电池在模组成组时，为了使电池更好的排列固定，对电池施加一个垂直厚度方向的压缩力，压缩力过大，电池内部可能收到损伤，甚至漏液。电池压缩力测试条件如下：

-Compression area 压缩面积：186.6mm ×209.0 mm (L × H2)

-Compression speed 压缩速度：0.02 mm/s

-Compression direction 压缩方向：Y direction Y 方向

-Cell SOC 电池 SOC：15 % ~ 40 %

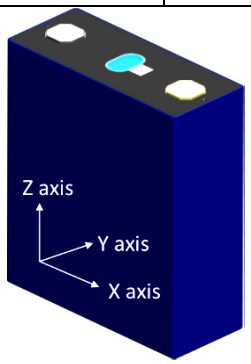

Fig. 12 Diagram of LF356L cell directions

图 12 LF356L 电池方向示意图

Table 13 Cell Compression Force Limit Parameters

表 13 电池压缩力限制参数

Items 项目	Compression Force 压缩力
Recommended compression force 推荐压缩力	3000 N ~ 7000 N
Instantaneous maximum compression force 瞬时最大压缩力	≤ 10000 N

The compression force of the cell shall be no larger than 10000 N, otherwise the cell may be damaged.

电池承受的压缩力不能超过 10000 N，否则可能电池会受到损害。

4.7 Cell Swelling Force 电池膨胀力

The inherent characteristics such as the rebound of the electrode thickness may lead to cell expansion during use which generates force on the clamp, and the force increases with the attenuation of the cell capacity. The cell swelling force at BOL and EOL (60% SOH) refer to Table 3:

在使用过程中，因极片厚度反弹等固有特性导致电池膨胀，而对约束夹具产生的作用力；电池的膨胀力随着电池容量的衰减而增加，电池 BOL 和 EOL（60% SOH）膨胀力参考表 3：

Customer shall fully consider the influence of the cell swelling force when designing the module. The product generates expansion force during use, and the expansion force is about 60000 N when the cell capacity attenuates to 60% under the test conditions of 15 mm steel plate + 0.0 mm GAP (the space for cells to expand). Customers shall consider the reliability of structural strength in the product design process, and it is suggested to reserve 2.0 mm ~ 2.5mm expansion space while grouping the cells.

客户在设计模组时，应充分考虑电池膨胀力的影响。产品在使用过程中会产生膨胀力，电芯在 15 mm 钢板+ 0.0 mm GAP（可供电芯膨胀的空间）测试条件下衰减至 60%时膨胀力约为 60000 N，客户在产品设计过程中需要考虑结

构强度可靠性，建议电芯成组预留 2.0 mm ~ 2.5 mm 的膨胀空间。

4.8 Recommended Temperature Control 温度管理建议

The recommended temperature collection points are the poles and the code when collecting temperature of the cell surface.The cell thermodynamic parameters needed in the thermal management system are shown in the following table.
对电池表面进行温度采集时，建议温度采集点布置在极柱或刻码。对热管理系统中所需要的电芯热力学参数见下表：

Table 14 Cell Thermal Conductivity Parameters

表 14 电池导热系数参数

Mean thermal conductivity 导热系数均值	Thermal Conductivity W/(m·K) 导热系数 W/(m·K)		
	X direction 方向	Z direction 方向	Y direction 方向
	9~12 W/(m·K)	10 ~ 13 W/(m·K)	2 ~ 3 W/(m·K)
Mean heat capacity 热容均值	Heat Capacity 热容 (kJ/(kg·K))		
	0.9 ~ 1.1 kJ/(kg·K)		

4.9 After charging, the cell should be used as soon as possible to avoid loss of usable capacity due to self-discharge. If long-term storage is required, adjust the cell SOC to 30% ~ 40%. The recommended storage conditions are: 0℃ ~ 25℃, relative humidity ≤ 60%.

电池进行充电后，需尽快使用，以免因自放电而造成可用容量损失。若需要存储，应将 SOC 调整为 30% ~ 40% SOC。推荐的存储条件为：0℃ ~ 25℃，相对湿度≤ 60%。

4.10 The state of charge (SOC, capacity state) of the cell should be kept at 15% ~ 40% during storage. In order to prevent the performance differences after long-term storage (more than three months), perform a standard charge-discharge cycle every 3 months. It is recommended that the storage time after receiving the cells should not exceed half a year to avoid quality problems due to storage overdue.

电池单体贮存时，荷电态（SOC，容量状态）应保持在 15% ~ 40%，长期贮存（三个月以上）时为防止电芯性能差异，应每 3 个月进行一次标准充放电循环；建议收到货后储存时间不超过半年，避免存储超期造成的质量问题。

4.11 It is not allowed to ship with inflammable, explosive and corrosive articles in the same vehicle during transportation, and stacking is prohibited during large package transportation; The product shall not be exposed to rain, snow and other liquid substances without any protection, or suffer from mechanical damage;

在运输过程中不允许和易燃、易爆、易腐蚀的物品同车装运，大包装运输过程中禁止堆叠；产品不允许经受雨、雪或液体物质的淋袭与机械损伤；

4.12 While handling, lift trucks or special tools shall be used to load and unload products; Handle with care, and do not throw or squeeze, which may cause cell damage or personal injury. It is strictly prohibited to put cells together with corrosive substances such as acid and alkali.

产品装卸时，须采用升降车或专用工具对产品进行上下车；要轻取轻放，不得扔掷、挤压，造成电池损坏或对人身的意外伤害，严禁与酸碱等腐蚀物品放在一起。

5 Safety Precautions 安全防范

- It is strictly forbidden to immerse the cell in water. When it is not in use, it should be placed in a cool and dry environment.

  严禁将电池浸入水中，保存不用时，应放置于阴凉干燥的环境中。

- Do not over-charge the cell. Otherwise, cell overheating and fire may occur. During cell installation and use, hardware and software must be protected against multiple over-charge failures. See 4.3 of this specification for the minimum requirements of protection.

  禁止电池过充，否则，可能引起电池过热和火灾事故的发生。在电池安装和使用中，硬件和软件需实行多重过充失效安全保护。最低保护要求见本规格书 4.3 条。

- It’s necessary to set a reasonable charging time limit, otherwise, the cell may overheat, resulting in thermal runaway or fire. BMS management failure of this kind shall be considered during module design.

  应对电池持续充电时长进行合理限制。充电时间过长电池可能会出现过热现象，进而引起热失控和火灾。在模组设计时需考虑此类 BMS 管理失效情况。

- If improper charge termination occurs, the root reasons shall be found and resolved before reuse to avoid negative effects on electrical and safety performances.

  电池非正常终止充电时，为避免未知原因对电池性能及安全的影响，需明确根本原因并彻底解决后再使用。

- It is forbidden to over-discharge. During the normal use of the cell, charge the cell regularly to keep the voltage above 2.8 V, so as to avoid over-discharge.

  禁止过放电。在电池正常使用过程中，为防止过放电，电池应定期充电，将电压维持在 2.8 V 以上。

- It is forbidden to use or place the cell at a high temperature environment. Otherwise, cell overheat, function failure or life shorten may occur.

  禁止在高温下使用或放置电池，否则可能会引起电池过热或功能失效、寿命减短。

- The temperature of the cell shall not exceed 65℃ in any normal use, otherwise the BMS must shut down the cell

and stop cell operation.

在任何正常的使用情况下，电池温度不能超过 65℃，如果电池温度超过 65℃，电池管理系统需关闭电池，停止电池运行。

- Please use a special charger for lithium-ion batteries when charging.

  充电时请选用锂离子电池专用充电器。

- During use, please connect the positive and the negative of the cell strictly according to the labels and instructions, and reverse charging is forbidden.

  在使用过程中，严格按照标示和说明连接电池正负极，禁止反向充电。

- It is forbidden to use metal to directly connect the positive and the negative of the cell to short-circuit. Otherwise, strong current and high temperature may cause personal injury or fire.

  禁止用金属直接连接电池正负极短路，否则强电流和高温可能导致人身伤害或者火灾。

- It is forbidden to transport or store the cell with metal, such as hairpins, necklaces, etc.

  禁止将电池与金属，如发夹、项链等一起运输或贮存。

- It is forbidden to knock, throw, step on or bend the cell.

  禁止敲击或抛掷、踩踏和弯折电池等。

- It is forbidden to directly weld the cell.

  禁止直接焊接电池。

- It is forbidden to directly pierce the cell with nails or other sharp objects.

  禁止用钉子或其它利器刺穿电池。

- Prevent the cell from mechanical shock, collision and pressure impact. Otherwise, the cell may be short-circuited internally, resulting in high temperature and fire.

  尽力保护电池，使其免受机械震动、碰撞及压力冲击，否则电池内部可能短路，产生高温和火灾。

- It is forbidden to use it in places with strong static electricity and strong magnetic fields; otherwise cell safety protection devices may be damaged and cause safety hazards.

  禁止在强静电和强磁场的地方使用，否则易破坏电池安全保护装置，带来安全隐患。

- Customer shall securely fix the cell to a solid surface and bind the power cord in a proper place to avoid arcing and sparks caused by friction.

  客户应将电池安全地固定在固体平面上，并将电源线安全地束缚在合适的位置，以避免摩擦而引起电弧和火花。

- It is forbidden to use plastic for cell encapsulation and electrical connection. Improper electrical connection may cause overheat during cell use.

  严禁用塑料封装电池或用塑料进行电气连接。不正确的电气连接方式可能会造成电池使用过程中发生过热现象。

- If the cell leaks and the electrolyte spills onto the skin or clothes, immediately wash the affected area with running

water. If the cell leaks and the electrolyte enters the eyes, mouth, nose and other open parts of the human body, immediately wash with plenty of water and seek medical treatment immediately, otherwise serious injuries will be caused to the human body. No person or animal is allowed to swallow any part of the cell or any substance contained in the cell.

如果电池漏液，电解液溅到皮肤或衣服上，应立即用流动的水清洗受影响区域，如果电池发生泄露，电解液进入眼睛、口、鼻等人体开放部位，应立即用大量清水冲洗，并马上送医治疗，否则会对人体造成严重伤害。禁止任何人或动物吞食电池的任何部位或电池所含物质。

- If the cell emits peculiar smell, heat, discoloration, deformation, or any abnormality during use, storage, or charging, immediately remove the cell from the device or charger and stop using it.

  如果电池发出异味、发热、变色、变形或使用、贮存、充电过程中出现任何异常，立即将电池从装置或充电器中移离并停用。

- It is prohibited to disassemble the product without the written consent of EVE.

  未经 EVE 书面同意，禁止私自拆解产品。

6 Disclaimer 免责声明

- If the product demand party or user does not use the product in accordance with the provisions of this specification, EVE will no longer take any relevant responsibility such as product quality assurance liability and loss compensation caused thereby. In case of any negative impact on EVE's reputation due to the above-mentioned actions, EVE reserves the right to investigate the legal liability of the product demand party.

  如果由于产品需求单位或使用者不按本说明书中的规定进行使用，EVE 不再承担产品质量保证责任及由此引起的损失赔偿等一切相关责任。因前述行为，对 EVE 的声誉造成负面影响的，EVE 保留追究产品需求单位法律责任权利。

- EVE reserves the right to modify the product specification. Before ordering EVE products, customers need to confirm the latest status of the products in advance with EVE.

  EVE 保留对本产品规格书修改的权利。客户在订购 EVE 产品前，需与 EVE 提前确认产品的最新状态。

- This specification is written in both Chinese and English. In case of any difference between the Chinese version and the English version, the Chinese version shall prevail.

  本规格书以中英双语书就，如中英文约定存在冲突时，以中文版本为准。

7 Risk Warning 风险警告

7.1 Warning Declaration 警示声明

Warning 警告

The cell has potential hazards. Please take proper precautions when operating and maintaining the cell!

The cell must be operated with proper tools and protective equipment.

Cell maintenance must be performed by professionals with cell expertise and safety training.

Failure to comply with these warnings may result in multiple disasters.

电池存在潜在的危险，在操作和维护时必须采取适当的防护措施！

必须使用正确的工具和防护装备操作电池。

电池的维护必须由具有电池专业知识并经过安全培训的人士执行。

不遵守上述警告可能造成多种灾难。

7.2 Types of Hazards 危险类型

Customer must be aware of the following potential hazards in the use and operation of cells:

客户知悉在电池使用和操作过程中存在以下潜在的危险：

a) There is a risk from electric shocks or electric arcs during operation.

存在受到电击或者电弧伤害的风险。

b) There is a risk from the electrolyte or other chemicals.

存在受到电解液或其他化学品危害的风险。

c) Proper operation methods and protective equipment shall be selected to avoid accidental short circuit, leading to electric arcs, explosion or thermal runaway.

为防止发生意外短路，造成电弧、爆炸或热失控，需选择合适的操作方法及防护装备。

8 Others 其他

8.1 Rights and Obligations of EVE EVE 的权利和义务

- EVE shall inspect according to the inspection standards in the protocol signed with the customer, and the products provided shall meet the requirements of various parameters in the protocol;

  EVE 按照与客户签订的协议中的检验标准进行检验，提供产品应符合协议中各项参数要求；

- EVE shall provide customer with stable and reliable products confirmed by both parties;

  EVE 向客户提供双方确认的、稳定可靠的产品；

- EVE is obliged to provide high-quality services for its products, and the service standards shall be in accordance with the standards promised by EVE;

EVE 有义务为其产品提供优质的服务，服务标准按 EVE 所承诺的标准服务；

➢ EVE shall provide timely technical support and service in case of any problem or failure during the use and maintenance of system products by customer.

在客户对系统产品的使用及维护过程中遇到问题或故障时，EVE 进行及时的技术支持及服务。

8.2 Rights and Obligations of Customer 客户的权利和义务

➢ Customer must conduct production in strict accordance with the technical data provided by EVE, and strictly implement the cell prevention measures, safety limits and cell operation instructions in the technical data provided by EVE.

客户应严格按照 EVE 提供的技术资料进行生产，严格执行 EVE 所提供的技术资料中的电池防范措施、安全限制和电池操作说明。

➢ Customer has the obligation to ensure the safety of products by EVE and shall take corresponding fire prevention, waterproof and other measures.

客户有义务保证 EVE 产品的安全，应采取相应的防火、防水等措施。

➢ Customer has the obligation to make fair and detailed use records and monitoring data of product operation for EVE's products, which can be used as a reference for the division of product quality responsibilities. If there is no complete monitoring data within the service life of the battery system, EVE shall not be responsible for product quality assurance.

客户有义务对 EVE 的产品做出公平、公正详细的使用记录及产品运转的监测数据，用作于产品质量责任划分的参考，不具备完整的电池系统使用期限内的监测数据的，EVE 不承担产品质量保证责任。

➢ Customer has the obligation to notify EVE's personnel to be present and be informed of the actual situation when products of EVE operate abnormally.

客户有义务在 EVE 产品运作异常时，在可能的情况下通知 EVE 人员到场，了解实际情况。

➢ In the process of product manufacturing, customer shall take all corresponding responsibilities for the problems or accidents caused by the operation in violation of the safety rules, the use beyond the conditions specified in this technical agreement, or the combination of the product and the circuit (not the quality defects of the product itself).

客户在产品制造过程中，因违反安全守则操作、在本规格书说明条件之外使用及产品与电路等搭配（非产品自身质量缺陷）所产生的问题或事故，其责任与 EVE 无关，应由客户承担相应的责任。

➢ Any matter not mentioned in this specification must be negotiated and determined by both parties.

任何本规格书中未提及的事项，须经双方协商确定。

8.3 Confidentiality agreement 保密协议

The customer shall keep the cooperation content highly confidential. Without the permission of EVE, the customer shall not disclose any content of the technical agreement to a third party. Otherwise, the customer will be held responsible according to relevant laws.

客户应对合作内容高度保密，未经 EVE 许可，不得向第三方透露规格书的任何内容，否则，将依照相关法律追究责任。

Appendix 1: Cell Drawing of LF356L 附录 1：LF356L 电池图纸

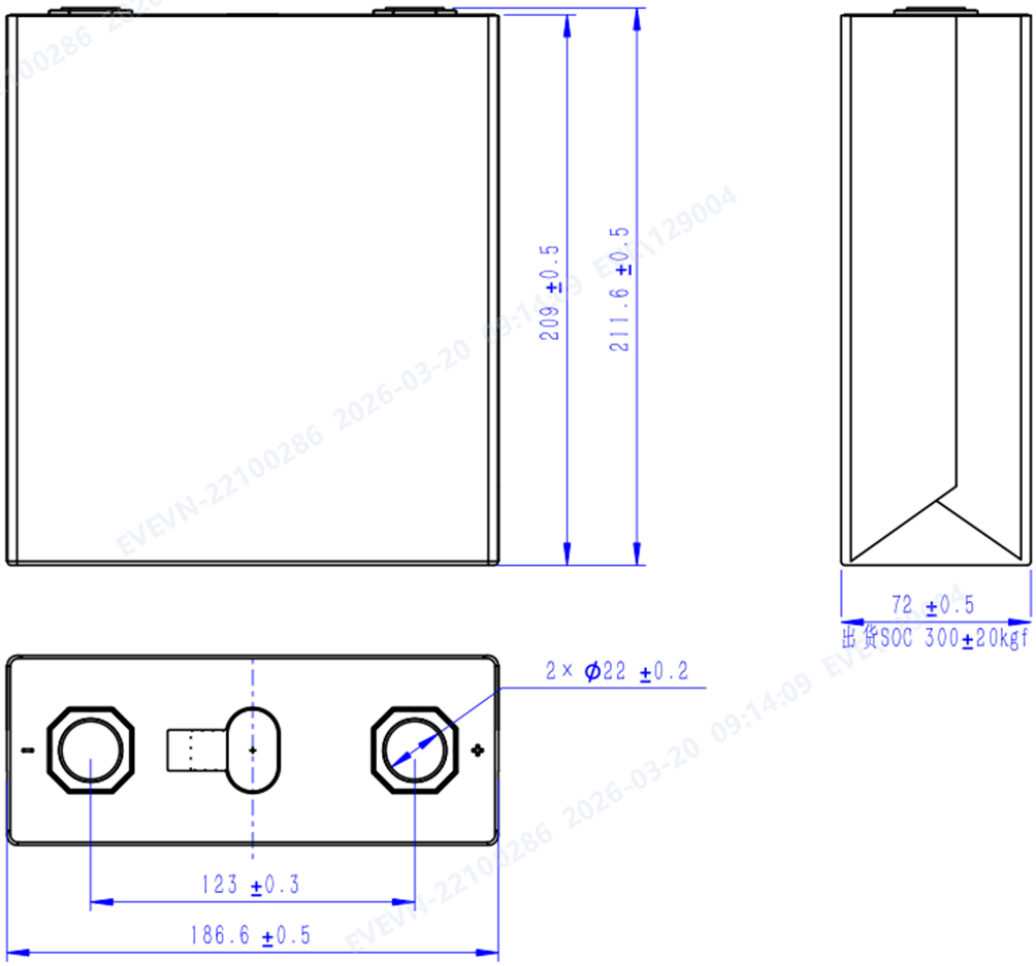

Fig. 15 Diagram of cell size and appearance
图 15 电池尺寸及外观图

Appendix 2: Test Conditions and Methods 附录 2：试验条件及方法

1.1 Environmental Conditions 环境条件

Unless otherwise specified, the test should be carried out in an environmental temperature of 25°C ± 2°C, relative humidity of 10% ~ 90%, and atmospheric pressure of 86 kPa to 106 kPa. The room temperature mentioned in this specification refers to 25°C ± 2°C.

除另有规定外，试验应在温度为 25°C ± 2°C，相对湿度 10% ~ 90%，大气压力为 86 kPa ~ 106 kPa 的环境中进行。本规格书所提到的室温，是指 25°C ± 2°C。

1.2 Measuring Instruments 测量设备

The accuracy of measuring instruments shall meet the following requirements:

试验装置应符合下列要求：

A. Voltage measuring device 电压测量装置：± 0.05 % FS；

B. Current measuring device 电流测量装置：± 0.05 % FS；

C. Temperature measuring device 温度测量装置：± 1°C；

D. Dimension measuring device 尺寸测量装置：± 0.01 mm；

E. Weight measuring device 重量测量装置：± 0.1 g。

Note: During the testing process, voltage, current, ambient temperature, and cell temperature must be recorded. It is recommended to collect the cell temperature at the terminal and the center of the large surface (or side surface).

备注：测试过程中，均需记录电压、电流、环境温度和电池温度，电池温度采集点建议布置在极柱和大面（或侧面）中心处。

1.3 Test Clamp Preparation and Installation 测试夹具准备和安装

1.3.1 Ordinary Steel Clamp 普通钢夹具

The single cell shall be clamped with steel splints (thickness: 12 mm). The splints need to cover the large surfaces of the cell and be fixed with 6 M8 bolts. All sides of the splints need to be covered with insulating film. Clamp as shown below:

单体电池需采用钢夹板（厚度：12 mm）固定，夹板需要覆盖住电池大面，夹板之间采用 6 个 M8 螺栓固定，夹板各个面需要有绝缘膜，夹具工装如下图所示：

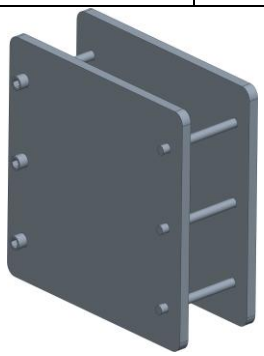

Fig. 1 Diagram of the clamp
图 1 夹具示意图

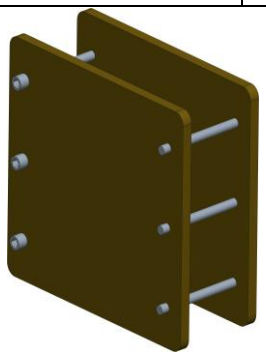

Fig. 2 Diagram of the clamp covered with insulation film
图 2 电池夹具包绝缘膜图

Place the cell (15% ~ 40% SOC) which is covered with blue film (material: PET, thickness: 0.1 mm) and top film (material: PC, thickness: 0.3 mm) in the middle of the splint, fix the clamp with 6 M8 bolts to ensure the initial compression force on the cell is 300 kgf ± 20 kgf,. Then use a micrometer to measure the thickness of the cell (at upper, middle and bottom) with splints, and the thickness tolerance shall be controlled within 0.3 mm.

将包覆有蓝膜（材质：PET，厚度 0.1 mm）和顶底部贴片（材质：PC，厚度 0.3 mm）的电池（15% ~ 40% SOC）准备好后，置于夹具中间，使用 6 个 M8 螺栓固定钢夹具保证电池受夹具初始预紧力为 300 kgf ± 20 kgf，需采用千分尺测量带夹板电池的厚度（上、中、下），厚度差异需控制小于等于 0.3 mm。

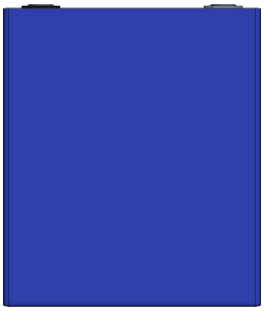

Fig. 3 Diagram of cell filming
图 3 电池包膜示意图

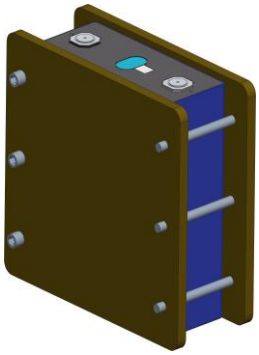

Fig. 4 Diagram of cell with clamp
图 4 电池带夹具示意图

1.3.2 Swelling Force Clamp 膨胀力夹具

Place the cell (15% ~ 40% SOC) which is covered with blue film (material: PET, thickness: 0.1 mm) and top film (material: PC, thickness: 0.3 mm) in the middle of the splint, and adjust the swelling force clamp pre-tensioning device until the initial compression force is (300 kgf ± 20 kgf). Then use a micrometer to measure the thickness of the cell (at upper, middle and bottom) with splints, and the thickness tolerance shall be controlled within 0.3 mm.

将包覆有蓝膜（材质：PET，厚度 0.1 mm）和顶底部贴片（材质：PC，厚度 0.3 mm）的电池（15% ~ 40% SOC）准备好后，置于膨胀力夹具中间，调节膨胀力夹具预紧装置，使传感显示装置压缩力为 300 kgf ± 20 kgf，上夹板后，需采用千分尺测量带夹板电池的厚度（上、中、下），厚度差异需控制小于等于 0.3 mm。

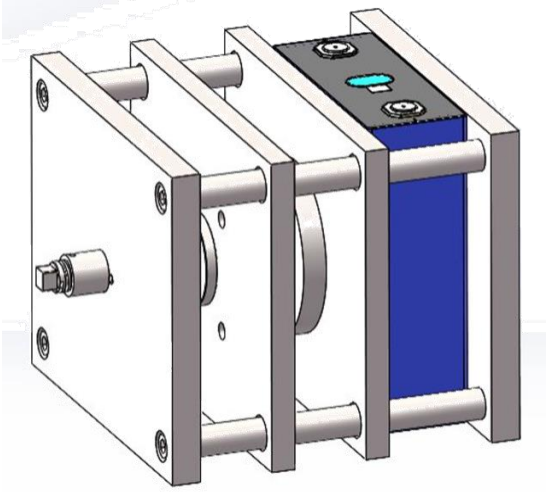

Fig. 5 Diagram of cell with swelling force clamp
图 5 电池带膨胀力夹具示意图

1.4 Dimensions 尺寸

Test instrument: Automatic wrapping machine;

试验设备：自动包膜机；

Test method: Use the wrapping machine to measure the length, width and height of the cell. And apply a 300 kgf ± 20 kgf force on it.

试验方法：使用自动包膜机测试电池长度、宽度和高度，施加 300 kgf ± 20 kgf 的压力。

The thickness of the cell will increase as the SOC increases as well as with the using time. The thickness here indicates the thickness of the cell at delivery.

电池厚度随着 SOC 增加会有所增加，随着使用时间增加会有所增加，此处厚度指出货时电池的厚度。

1.5 Weight 重量

Test instrument: Electronic scale;

试验设备：电子秤；

Test method: measure the weight of the cell with the electronic scale.

试验方法：使用电子秤测量电池的重量。

1.6 Internal Resistance 内阻

a. ACR: test the cell at delivery SOC with 1kHz sine wave current at room temperature.

a. 交流内阻（ACR）：在室温条件下，出货 SOC 电池采用 1 kHz 正弦波电流进行测试。

b. DCR: Charge the cell to 3.65 V with constant current of 0.5C, and then charge at a constant voltage of 3.65 V until the current decreases to 0.05C. Rest for 30 minutes, and discharge at a constant current of 0.5C for 60 minutes afterwards (adjust the SOC to 50%). Then rest for 1 h, and record the voltage V_1 at the end of the period. Discharge the

cell with a constant current of 1C for 10 seconds and record the voltage V_2 at the end of the rest, and calculate the DCR., DCR= $(V_1 - V_2) \times 1000 / 356.3$ (mΩ).

b. 直流内阻（DCR）：电池以 0.5C 的电流恒流充电至 3.65 V 后，转恒压充电至充电电流为 0.05C 截止，搁置 30 min，然后以 0.5C 恒流放电 60 min（调整 SOC 为 50%），搁置 1 h，记录搁置末期电压 V_1，用 1C 恒流放电 10 s，记录放电末期电压 V_2，计算 DCR，DCR= $(V_1 - V_2) \times 1000 / 356.3$ (mΩ)。

1.7 Pretreatment 预处理

Before the formal test, pretreat the cell to ensure it is activated and stable. The steps are as follows:
正式测试开始前，电池需要先进行预处理循环，以确保试验对象的性能处于激活和稳定的状态。其步骤如下：

a. Charge the cell according to the standard charging mode;

a. 电池按照标准充电模式充电；

b. Discharge the cell according to the standard discharging mode;

b. 电池按照标准放电模式放电；

c. Repeat a~b no more than 5 times;

c. 重复 a~b 不超过 5 次；

If the discharge capacity of the cell changes no more than 3% of the nominal capacity for two consecutive times, it is considered that the cell has completed the pretreatment, and the pretreatment can be terminated.

如果电池连续两次的放电容量变化不高于标称容量的 3%，则认为电池完成了预处理，预处理可以中止。

1.8 Charge Calibration 初始化充电

At the ambient temperature of 25℃ ± 2℃, rest for 5 h;

Discharge at a constant power of 570 W to 2.5 V, and rest for 10 min;

Charge at a constant power of 570 W to 3.65 V, and rest for 10 min.

在环境温度 25℃ ± 2℃的条件下，搁置 5 h；

对电池以 570 W 恒功率放电至 2.5 V，搁置 10 min；

对电池以 570 W 恒功率充电至 3.65 V，搁置 10 min。

1.9 Discharge Calibration 初始化放电

At the ambient temperature of 25℃ ± 2℃, rest for 5 h;

Charge at a constant power of 570 W to 3.65 V, and rest for 10 min;

Discharge at a constant power of 570 W to 2.5 V, and rest for 10 min.

在环境温度 25℃ ± 2℃的条件下，搁置 5 h；

对电池以 570 W 恒功率充电至 3.65 V，搁置 10 min；

对电池以 570 W 恒功率放电至 2.5 V，搁置 10 min。

1.10 Capacity and Energy Calibration 初始化充放电能量

Capacity calibration is to discharge the cell according to (1.9) at the ambient temperature of 25°C ± 2°C. Charge the cell at a constant power of 570 W to 3.65 V and rest for 10 min. Discharge the cell at a constant power of 570 W to 2.5 V and rest for 30 min. Record the initial charging energy as E_0, the initial discharging energy as E_0* and the initial discharging capacity as C_0*.

容量标定是在环境温度 25°C ± 2°C，对电池按照（1.9）进行初始化放电。以 570 W 恒功率充电至 3.65 V，搁置 30 min；以 570 W 恒功率放电至 2.5 V，搁置 10 min。记录初始充电能量值为 E_0，初始放电能量值为 E_0^*，初始放电容量值为 C_0^*。

1.11 Rate Discharge Performance 倍率放电性能

Discharge the cell according to (1.9) at the ambient temperature of 25°C ± 2°C;

Charge the cell to 3.65 V at a constant power of 570 W and rest for 10 min, note as E_1;

Discharge to 2.5 V at a constant power of 570 W and rest for 10 min, note as E_1*;

Charge the cell to 3.65 V at a constant power of 1140 W and rest for 10 min, note as E_2;

Charge the cell to 3.65 V at a constant power of 570 W and rest for 10 min;

Discharge to 2.5 V at a constant power of 1140 W and rest for 10 min, note as E_2*;

Discharge the cell to 2.5 V at a constant power of 570 W and rest for 10 min;

Charge the cell to 3.65 V at a constant power of 1140 W and rest for 10 min, note as E_3;

Discharge to 2.5 V at a constant power of 1140 W and rest for 10 min, note as E_3*;

Discharge to 2.5 V at a constant power of 570 W and rest for 10 min;

1P discharge energy retention rate = E_2*/ E_1*;

0.5P energy efficiency = E_1*/ E_1;

1P energy efficiency = E_3*/ E_3.

在环境温度 25°C ± 2°C的条件下，对电池按照（1.9）初始化放电。

以 570 W 恒功率充电至 3.65 V，搁置 10 min，记为 E_1；

以 570 W 恒功率放电至 2.5 V，搁置 10 min，记为 E_1*；

以 1140 W 恒功率充电至 3.65 V，搁置 10 min，记为 E_2；

以 570 W 恒功率充电至 3.65 V，搁置 10 min；

以 1140 W 恒功率放电至 2.5 V，搁置 10 min，记为 E_2*；

以 570 W 恒功率放电至 2.5 V，搁置 10 min；

以 1140 W 恒功率充电至 3.65 V，搁置 10 min，记为 E_3；

以 1140 W 恒功率放电至 2.5 V，搁置 10 min，记为 E_3*；

以 570 W 恒功率放电至 2.5 V，搁置 10 min；

1P 放电能量保持率= E_2^*/ E_1^* *100%；

0.5P 能量效率= E_1^*/ E_1 *100%；

1P 能量效率= E_3^*/ E_3 *100%；。

1.12 High/Low Temperature Discharge Performance 高/低温放电性能

1.12.1 45°C Charge/discharge Performance 45°C充放电性能

Discharge the cell according to (1.9) at the ambient temperature of 25°C ± 2°C;

Rest the cell for 16 h under the ambient temperature of 45°C ± 2°C;

Charge to 3.65 V at a constant power of 570 W and then rest for 10 min, note the energy as E_4;

Discharge to 2.5 V at a constant power of 570 W and rest for 10 min, note the energy as E_4*;

Discharge energy retention rate = E_4*/E_0*, energy efficiency = E_4*/E_4.

在环境温度 25°C ± 2°C的条件下，对电池按照（1.9）初始化放电；

在 45°C ± 2°C条件下搁置 16 h；

以 570 W 恒功率充电至 3.65 V，搁置 10 min，记为 E_4；

以 570 W 恒功率放电至 2.5 V，搁置 10 min，记为 E_4^*；

放电能量保持率= E_4^*/ E_0^**100%，能量效率= E_4^*/ E_4*100%。

1.12.2 5°C Charge-discharge Performance 5°C充放电性能

Discharge the cell according to (1.9) at the ambient temperature of 25°C ± 2°C;

Rest the cell for 5 h at the ambient temperature of 5°C ± 2°C;

Charge to 3.65 V at a constant power of 570 W and then rest for 10 min, note the energy as E_5;

Discharge to 2.5 V at a constant power of 570 W and rest for 10 min, note the energy as E_5*;

Discharge energy retention rate = E_5*/ E_0*, energy efficiency = E_5*/ E_5.

在环境温度 25°C ± 2°C的条件下，对电池按照（1.9）初始化放电；

在 5°C ± 2°C条件下搁置 5 h；

以 570 W 恒功率充电至 3.65 V，搁置 10 min，记为 E_5；

以 570 W 恒功率放电至 2.5 V，搁置 10 min，记为 E_5^*；

放电能量保持率= E_5^*/ E_0^**100%，能量效率= E_5^*/ E_5*100%。

1.13 Capacity Retention and Capacity Recovery 荷电保持与恢复

1.13.1 25°C Capacity Retention and Capacity Recovery 25 °C荷电保持与恢复

Charge the cell according to (1.8) at the ambient temperature of 25°C ± 2°C;

Store the cell for 28 days at the ambient temperature of 25°C ± 2 °C;

Discharge to 2.5 V at a constant power of 570 W and rest for 10 min, note the energy as E_6*;

Charge to 3.65 V at a constant power of 570 W and rest for 10 min, note as E_6;

Discharge to 2.5 V at a constant power of 570 W and rest for 10 min, note the energy as E_7*;

Discharge energy retention rate = E_6*/ E_0*; Discharge energy recovery rate = E_7*/E_0*.

在环境温度 25°C ± 2°C的条件下，对电池按照（1.8）初始化充电；

电池在 25°C ± 2°C条件下储存 28 天；

以 570 W 恒功率放电至 2.5 V，搁置 10 min，记为 E_6^*；

以 570 W 恒功率充电至 3.65 V，搁置 10 min，记为 E_6；

以 570W 恒功率放电至 2.5 V，搁置 10 min，记为 E_7^*；

放电能量保持率= E_6^*/ E_0^**100%；放电能量恢复率= E_7^*/ E_0^**100%。

1.13.2 45°C Capacity Retention and Capacity Recovery 45 °C荷电保持与恢复

Charge the cell according to (1.8) at the ambient temperature of 25°C ± 2°C;

Store the cell for 30 days at 45°C ± 2°C and rest for 5 h at 25°C ± 2°C;

Discharge to 2.5 V at a constant power of 570 W and rest for 10 min, note the energy as E_8*;

Charge to 3.65 V at a constant power of 570 W and rest for 10 min, note the energy as E_7;

Discharge to 2.5 V at a constant power of 570 W and rest for 10 min, note the energy as E_9*;

Discharge energy retention rate = E_8*/ E_0*; Discharge energy recovery rate = E_9*/ E_0*.

在环境温度 25°C ± 2°C的条件下，对电池按照（1.8）初始化充电；

电池在 45°C ± 2°C条件下储存 30 天，在 25°C±2°C条件下搁置 5 h；

以 570 W 恒功率放电至 2.5 V，搁置 10 min，记为 E_8^*；

以 570 W 恒功率充电至 3.65 V，搁置 10 min，记为 E_7；

以 570 W 恒功率放电至 2.5 V，搁置 10 min，记为 E_9^*；

放电能量保持率= E_8^*/ E_0^**100%；放电能量恢复率= E_9^*/ E_0^**100%。

1.14 Storage 存储性能

1.14.1 25°C Storage 25°C存储

Charge the cell according to (1.8) at 25°C ± 2°C;

Discharge for 60 min at a constant power of 570 W and rest for 10 min;

Store the cell for 28 days at 25°C ± 2°C and rest for 5 h at 25°C ±2°C;

Discharge to 2.5 V at a constant power of 570 W and rest for 10 min;

Charge to 3.65 V at a constant power of 570 W and rest for 10 min, note the energy as E_8;

Discharge to 2.5 V at a constant power of 570 W and rest for 10 min, note the energy as E_{10}*;

Charge energy recovery rate = E_8/ E_0, discharge energy recovery rate = E_{10}*/ E_0*.

在环境温度 25°C ± 2°C的条件下，对电池按照（1.8）初始化充电；

以 570 W 恒功率放电 60 min，搁置 10 min；

电池在 25℃ ± 2℃条件下储存 28 天，在 25℃±2℃条件下搁置 5 h；

以 570 W 恒功率放电至 2.5 V，搁置 10 min；

以 570 W 恒功率充电至 3.65 V，搁置 10 min，记为 E_8；

以 570 W 恒功率放电至 2.5 V，搁置 10 min，记为 E_{10}^*；

充电能量恢复率= E_8/ E_0*100%，放电能量恢复率= E_{10}^*/ E_0^**100%。

1.14.2 50℃ Storage 50℃存储

Charge the cell according to (1.8) at the ambient temperature of 25°C ± 2°C;

Discharge for 60 min at a constant power of 570 W and rest for 10 min;

Store the cell for 28 days at the ambient temperature of 50°C ± 2°C and rest for 5 h at the ambient temperature of 25°C ± 2°C;

Discharge to 2.5 V at a constant power of 570 W and rest for 10 min;

Charge to 3.65 V at a constant power of 570 W and rest for 10 min;

Discharge to 2.5 V at a constant power of 570 W and rest for 10 min, note the energy as E_{10}*;

Discharge energy recovery rate = E_{10}*/ E_0*.

在环境温度 25℃ ± 2℃的条件下，对电池按照（1.8）初始化充电；

以 570 W 恒功率放电 60 min，搁置 10 min；

电池在 50℃±2℃条件下储存 28 天，在 25℃±2℃条件下搁置 5h；

以 570 W 恒功率放电至 2.5 V，搁置 10 min；

以 570W 恒功率充电至 3.65 V，搁置 10 min；

以 570 W 恒功率放电至 2.5 V，搁置 10 min，记为 E_{11}^*；

放电能量恢复率= E_{11}^*/ E_0^**100%。

1.15 25℃ Cycle life 25℃循环寿命

Before the test, prepare and install the clamp according to 1.3.1.

测试前按照 1.3.1 进行夹具准备和安装。

Pre-cycle initial capacity test: test the cell energy according to (1.10).

循环前初始容量测试：对电池按照 1.10 的方法进行能量测试。

Cycle test: at ambient temperature of 25°C ± 2°C;

循环测试：环境温度 25°C ± 2°C；

a. Discharge the cell in accordance with (1.9);

b. Rest for 5h at 45±2 °C;

c. Charge the cell to 3.65 V at a constant power of 570 W and rest for 10 minutes;

d. Discharge to 2.5 V at a constant power of 570 W and rest for 10 minutes;

e. Repeat steps b~c 8000 cycles.

a. 对电池按照（1.9）初始化放电；

b. 在（45±2）℃搁置 5h；

c. 以 570 W 恒功率充电至 3.65 V，搁置 10 min；

d. 以 570 W 恒功率放电至 2.5 V，搁置 10 min；

e. 重复 b~c 循环 8000 圈。

Capacity test after cycling at ambient temperature of 25℃ ± 2℃:

Charge the cell to 3.65 V at a constant power of 0.5P, rest for 30 min; Discharge to 2.5 V at a constant power of 0.5P, rest for 10 min; Charge the cell to 3.65 V at a constant power of 0.5P, rest for 10 min; Discharge to 2.5 V at a constant power of 0.5P, record the discharge capacity C_{11}^*. rest for 30 min; The capacity retention rate = C_{11}^* / 356.3 Ah × 100%.

在 25℃ ± 2℃的环境温度下循环后容量测试：以 570 W 恒功率充电至 3.65 V，搁置 30 min；以 570W 恒功率放电至 2.5 V，搁置 10 min；以 570 W 恒功率充电至 3.65 V，搁置 30 min；以 570 W 恒功率放电至 2.5 V，记录电池容量为 C_{11}^*，搁置 10 min；放电容量保持率 = C_{11}^* / 356.3 Ah *100%。

When the cell is at 80% SOH and 70% SOH, modify the charging and discharging power according to the capacity of the cell: 100% ~ 80% SOH, 570 W; 80% ~ 70% SOH; 456 W; 70% ~ 60% SOH, 399 W.

电池在 80% SOH、70% SOH，需按照电池容量，修正充放电功率：100% ~ 80% SOH，570 W；80% ~ 70% SOH，456W；70% ~ 60% SOH，399 W；

1.16 Swelling Force Test 膨胀力测试

Prepare and install the clamp according to 1.3.2. before the test.

测试前按照 1.3.2 进行夹具准备和安装。

Cycle according to (1.15.1), and record cell swelling force and discharge capacity retention rate during test process.

按照（1.15.1）进行循环，记录每圈充放电过程中的电池最大膨胀力和放电容量保持率。

1.17 Safety Performance 安全性能

1.17.1 Over-charge Test 过充电试验

Charge the cell according to (1.8) at the ambient temperature of 25℃ ± 2℃, and install the test clamp according to the methods in (1.3.1). Charge the cell to 5.475 V at a constant current of P_{rc}/U_{nom} or for 1 hour, and then stop charging. Observe for 1 hour. (Refer to GB/T 36276-2023 Lithium Ion Battery for Electrical Energy Storage)

在环境温度 25℃ ± 2℃的条件下，对电池按照（1.8）初始化充电，然后按照（1.3.1）的方法安装测试夹具。以 P_{rc}/U_{nom} 的电流恒流充电至 5.475 V 或充电时间达到 1 h，停止充电。观察 1 h。（参考 GB/T 36276-2023 《电力储能用锂离子电池》）

1.17.2 Over-discharge Test 过放电试验

Discharge the cell according to (1.8) at the ambient temperature of 25℃ ± 2℃, and install the test clamp according to the methods in (1.3.1). Discharge the cell to 0 V at a constant current of 356.3 A or for 90 min, and then stop

discharging. Observe for 1 hour. (Refer to GB/T 36276-2023 Lithium Ion Battery for Electrical Energy Storage)

在环境温度 25℃ ± 2℃的条件下，对电池按照（1.8）初始化放电，然后按照（1.3.1）的方法安装测试夹具。以 356.3 A 的电流恒流放电 90 min 或电压达到 0 V 时停止放电。观察 1 h。（参考 GB/T 36276-2023 《电力储能用锂离子电池》）

1.17.3 External Short-circuit Test 外短路试验

Charge the cell according to (1.8) at the ambient temperature of 25℃ ± 2℃, and install the test clamp according to the methods in (1.3.1). Short-circuit the positive and negative terminals of the cell externally for 10 min, and the resistance value of the external circuit shall be 1±0.2 mΩ. Observe for 1h. (Refer to GB/T 36276-2023 Lithium Ion Battery for Electrical Energy Storage)

在环境温度 25℃ ±2℃的条件下，对电池按照（1.8）初始化充电，然后按照（1.3.1）的方法安装测试夹具。将电池正、负极经外部短路 10 min，外部线路电阻值应为（1±0.2） mΩ。观察 1h。（参考 GB/T 36276-2023 《电力储能用锂离子电池》）

1.17.4 Crush Test 挤压试验

At the ambient temperature of 25℃ ± 2℃, charge the cell according to (1.8). And carry out the test under the following conditions:

在环境温度 25℃ ± 2℃的条件下，对电池按照（1.8）初始化充电，按照如下条件进行试验：

a) Crush direction: apply pressure perpendicular to the direction of the cell plate;

b) The form of the crush plate: a semi-cylinder with a radius of 75 mm, the length (L) of the semi-cylinder is greater than the size of the cell being crushed (refers to the figure below);

c) Crush speed: (5 ± 1) mm/s;

d) Crush degree: the crushing force reaches 50 kN; keep it for 10 minutes, stop crush.

e) Observe it for 1h. (Refer to GB/T 36276-2023 Lithium Ion Battery for Electrical Energy Storage)

a) 挤压方向：垂直于电池极板方向施压；

b) 挤压板形式：半径 75 mm 的半圆柱体，半圆柱体的长度（L）大于被挤压电池单体的尺寸；

c) 挤压速度：5 ± 1 mm/s；

d) 挤压程度：挤压力达到 50 kN 时保持该挤压力 10 min，停止挤压。

e) 观察 1 h。（参考 GB/T 36276-2023 电力储能用锂离子电池）

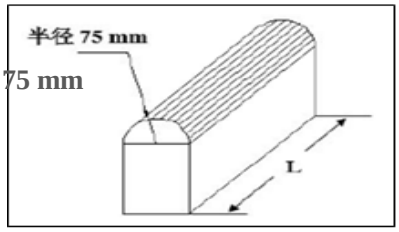

Fig. 6 Diagram of the Extrusion Device

图 6 挤压装置示意图

1.17.5 Drop Test 跌落试验

At the ambient temperature of 25℃ ± 2℃, charge the cell according to (1.8). Drop the cell from a height of 1.5 meter to the concrete floor with its positive or negative terminals downwards. Then observe it for 1 hour. (Refer to GB/T 36276-2023 Lithium Ion Battery for Electrical Energy Storage)

在环境温度 25℃ ± 2℃的条件下，对电池按照（1.8）初始化充电，将电池正负极柱向下从 1.5 m 高度处自由跌落至水泥地面上。观察 1 h。（参考 GB/T 36276-2023 《电力储能用锂离子电池》）

1.17.6 Low Pressure Test 低气压试验

At the ambient temperature of 25℃ ± 2℃, charge the cell according to (1.8), and then install the test clamp according to (1.3.1). Put the cell into the low-pressure box, adjust the pressure to 11.6 kPa, keep the temperature at 25℃ ± 2℃, and rest for 6 h. Then observe for 1 hour. (Refer to GB/T 36276-2023 Lithium Ion Battery for Electrical Energy Storage)

在环境温度 25℃ ± 2℃的条件下，对电池按照（1.8）初始化充电，然后按照（1.3.1）的方法安装测试夹具。电池放入低气压箱中，调节试验箱体中气压为 11.6 kPa，温度为 25℃ ± 2℃，静置 6 h。观察 1 h。（参考 GB/T 36276-2023《电力储能用锂离子电池》）

1.17.7 Heating Test (130℃) 加热试验（130℃）

At the ambient temperature of 25℃ ± 2℃, charge the cell according to (1.8), and then install the test clamp according to (1.3.1). Put the cell into the temperature box, rise the temperature to 130℃ ± 2℃ at a rate of 5 ℃/min, keep the temperature for 30 min and then stop heating. Observe for 1 hour. (Refer to GB/T 36276-2023 Lithium Ion Battery for Electrical Energy Storage)

在环境温度 25℃ ± 2℃的条件下，对电池按照（1.8）初始化充电，然后按照（1.3.1）的方法安装测试夹具。将电池放入温度箱，温度箱按照 5 ℃/min 的速率由室温升至 130℃ ± 2℃，并保持此温度 30 min 后停止加热。观察 1 h。（参考 GB/T 36276-2023 《电力储能用锂离子电池》）

1.17.8 Thermal Runaway Test 热失控试验

(1) At the ambient temperature of 25℃ ± 2℃, charge the cell according to (1.8), and then install the test clamp according to (1.3.1).

(1) 在环境温度 25℃ ± 2℃的条件下，对电池按照（1.8）初始化充电，然后按照（1.3.1）的方法安装测试夹具。

(2) Use a flat or rod-shaped heating device, and its surface should be covered with ceramic, metal or insulating layer. The heating power of the heating device should be in the range of 600 W ~ 1200 W. Complete the assembly of the cell and the heating device, the heating device should be in direct contact with the cell, and the size of the heating device

should not be larger than the heated surface of the cell; Install a temperature monitor, and the detection point temperature sensor is arranged on the far side of the principle heat conduction. That is, on the opposite side of the heating device. (see the picture below) The temperature data sampling interval should be shorter than 1 s, the accuracy should be ± 2℃, and the diameter of the temperature sensor tip should be less than 1 mm.

(2) 使用平面状或者棒状加热装置，并且其表面应覆盖陶瓷，金属或绝缘层，加热装置的功率要求为600 W ~ 1200 W。完成电池单体与加热装置的装配，加热装置与电池应直接接触，加热装置的尺寸规格应不大于电池单体的被加热面；安装温度监测器，监测点温度传感器布置在远离热传导的一侧，即安装在加热装置的对侧(如下图)。温度数据的采样间隔应小于1 s，准确度要求为± 2℃，温度传感器尖端的直径应小于1 mm。

(3) Charge at a constant current of 0.5C, start the heating device and continue to heat the test object. When thermal runaway occurs, the temperature of the monitoring point reaches 300℃, or the time reaches 4h, stop charged and turn off the heating device.

(3) 以 0.5C 电流充电，启动加热装置，当发生热失控或者监测点温度达到 300℃或时间达到 4h 时，停止充电，关闭加热装置，观察 1h。

(4) When three consecutive points of temperature rise velocity value dT/dt≥3℃/s are observed, or fire or explosion occurs, it is determined as thermal runaway. (Refer to GB/T 36276-2023 Lithium Ion Battery for Electrical Energy Storage)

(4) 设定连续监测到三个温升速率值 dT/dt≥3℃/s 或起火或爆炸作为发生热失控的判断条件。（参考 GB/T 36276-2023 电力储能用锂离子电池）

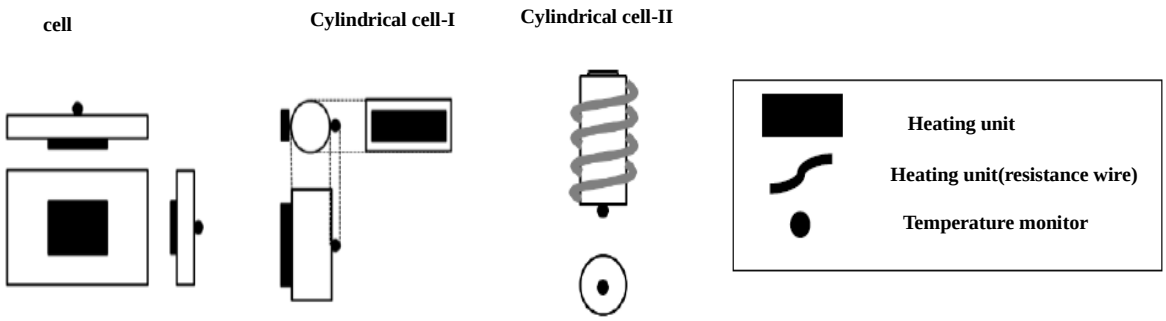

Fig. 7 Diagram of thermal runaway test
图 7 热失控试验加热示意图